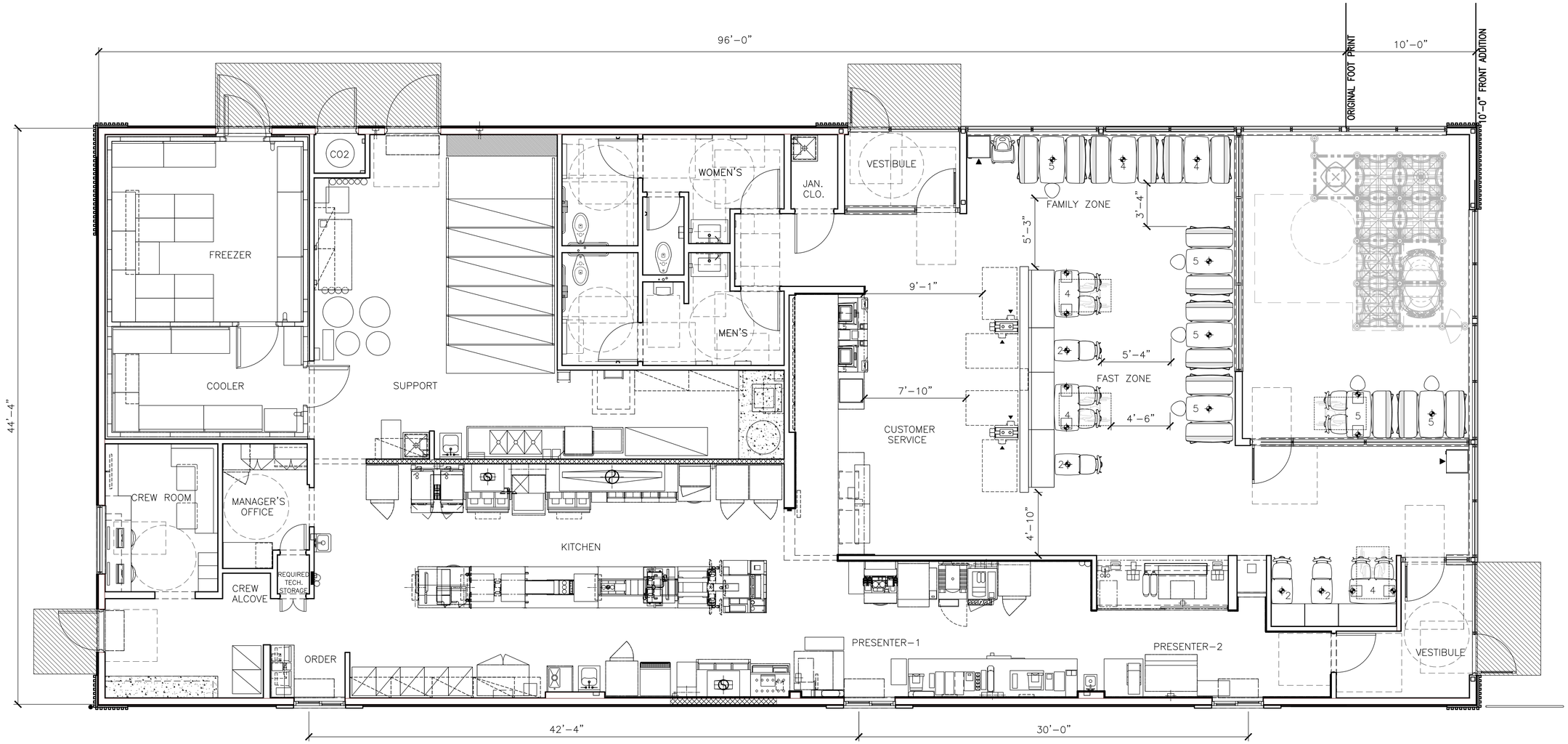

1 R1.3 FLOOR PLAN
1/4"=1'-0"

4597 +10'F - WW PLAN
4,759 GROSS SQ. FT. / 4,557 NET SQ. FT.
58 SEATS (4 ACCESSIBLE SEATS)

THIS DRAWING IS
FOR REFERENCE ONLY
NOT FOR CONSTRUCTION
SEATING LAYOUT IS SCHEMATIC, THE FINAL
SEATING LAYOUT TO BE PROVIDED BY OTHERS.

REV	DATE	DESCRIPTION	BY

DATE: .....

PREPARED BY:
URS
Architects/Engineers, Inc.
architects - engineers - planners
1255 Broad Street, Suite 201
Clifton, NJ 07013-3988
973.883.8590 fax 973.883.8501
http://www.urscorp.com

PREPARED FOR:
McDonald's USA, LLC

© 2019 McDonald's USA, LLC
These drawings and specifications are the confidential and proprietary property of McDonald's USA, LLC and shall not be copied or reproduced without written authorization. The contract documents were prepared for use on this specific site in conjunction with its issue date and are not suitable for use on a different site or at a later time. Use of these drawings for reference or example on another project requires the services of properly licensed architects and engineers. Reproduction of the contract documents for reuse on another project is not authorized.

DRAWN BY HM
STD ISSUE DATE 2019_9
REVIEWED BY –
DATE ISSUED 6/22/2020

TITLE
2020 STANDARD BUILDING – BB20
4597 +10'F–WOOD/WOOD

DESCRIPTION
WOOD BEARING WALLS W/FIBER CEMENT SIDING & Ci
WOOD ROOF TRUSS FRAMING
E.I.F.S./BATTEN/ALPOLIC PANEL/TILE/FIBER CEMENT SIDING

SITE ID 029-0019
SITE ADDRESS RT 130 & DUTCH NECK RD EAST WINDSOR, NJ

SHEET NO. 029-0273
R1.3
SEATING PLAN

URS PROJECT No. 60634291 TASK: 029-0273

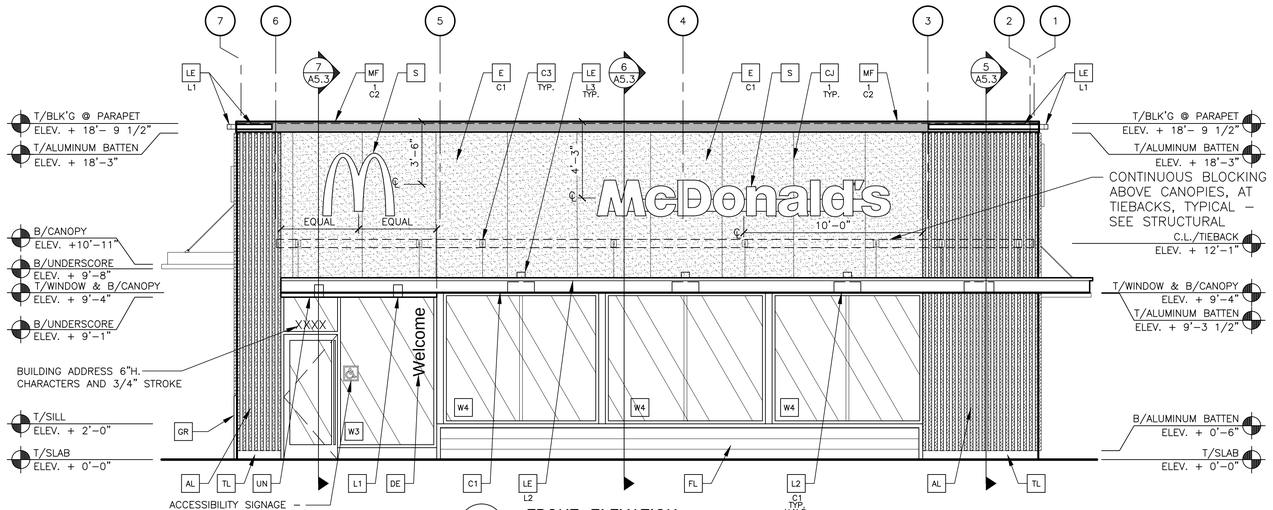

1 A2.0 **FRONT ELEVATION**
1/4" = 1'–0"

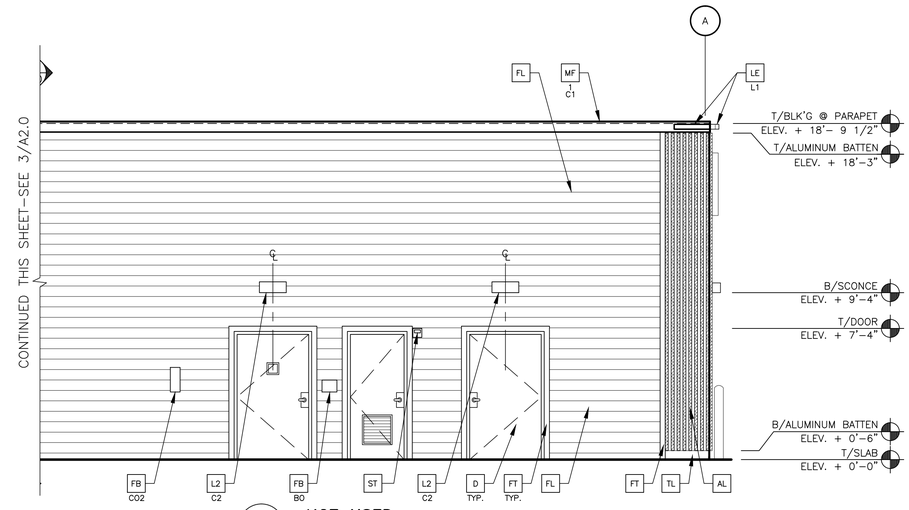

2 A2.0 **NOT USED**
–

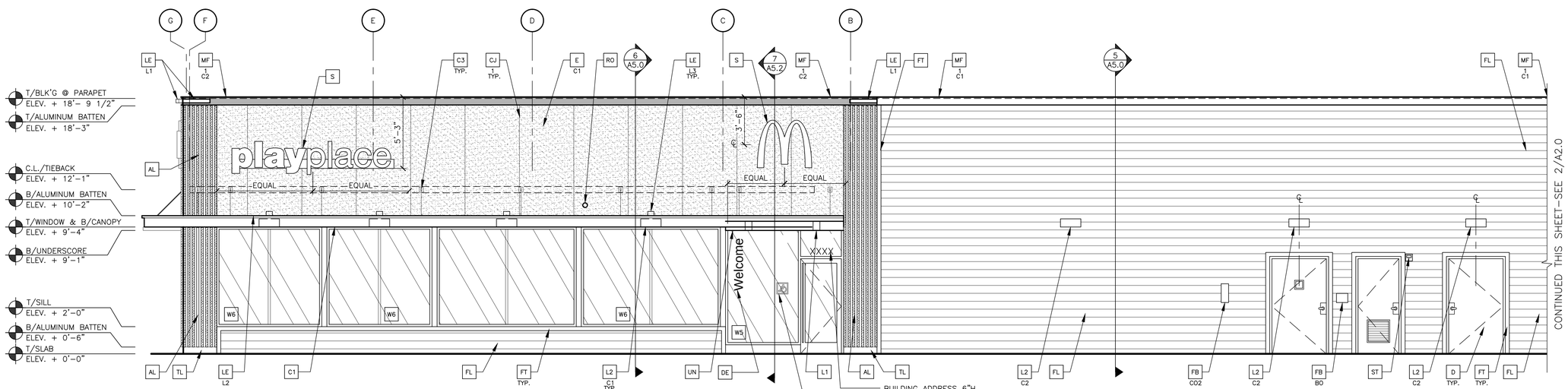

3 A2.0 **NON–DRIVE–THRU ELEVATION**
1/4" = 1'–0"

BUILDING SIGNAGE SCHEDULE

FACADE		SIGN ELEMENT	S.F.
FRONT	1	McDONALD'S "M" ARCH LOGO	14
	2	McDONALD'S LOGO	32.8
		TOTAL:	**46.8**
NON–DRIVE THRU SIDE	1	McDONALD'S "M" ARCH LOGO	14
	3	PLAYPLACE LOGO	28.3
		TOTAL:	**42.3**
DRIVE THRU SIDE			
	2	McDONALD'S LOGO	32.8
		TOTAL:	**32.8**
REAR	1	McDONALD'S "M" ARCH LOGO	14
		TOTAL:	**14**
TOTAL BUILDING SIGNAGE			**135.9**

KEY NOTES:

- **AL** ALUMINUM BATTEN SYSTEM
  MFR: B+N INDUSTRIES
  SIZE: 2"X2" PROFILE
  COLOR: WOOD GRAIN, BACKRAIL UNFINISHED, ENDCAP PAINTED TO MATCH
  SUBSTRATE: 1/2" EXTERIOR HIGH DENSITY OVERLAY (HDO) PLYWOOD, BB, GROUP 1, HDO BOTH FACES, APA TRADEMARKED. COURSE GRIT SAND SURFACES PRIOR TO PRIMING. PRIME AND PAINT BOTH SIDES AND ALL EDGES PRIOR TO INSTALLATION.
  SUBSTRATE COLOR: "IRON ORE" SW7069 BY SHERWIN WILLIAMS
- **AP** ALPOLIC METAL PANEL (COLOR: RAL 7022)
- **C1** ALUMINUM CANOPY SYSTEM W/FASCIA
  COLOR: WHITE
- **C2** ALUMINUM CANOPY SYSTEM
  COLOR: RAL 7022
- **C3** ALUMINUM CANOPY TIEBACK
  COLOR: RAL 7022
  GC TO PROVIDE CONTINUOUS BLOCKING ON WALL BEHIND TIEBACKS
- **CJ** CONTROL JOINT
  1 —TYPE: 1 = EIFS
- **D** HOLLOW METAL DOOR
  PAINT: SHERWIN WILLIAMS SW–7019 GAUNTLET GRAY
- **DE** DECAL BY GRAPHICS SUPPLIER
  SURFACE APPLIED, FIELD INSTALLED, PRE CUT, PRE SPACED.
  SUPPLIERS:
  VOMELA (866) 330–7337, ann.bowen@vomela.com
  GFX INTERNATIONAL (847) 543–4600, mcdonaldsdecor@gfxi.com
- **E** EXTERIOR INSULATION FINISH SYSTEM (E.I.F.S.)
  C1—COLOR:
  C1 = "IRON ORE" SW 7069 BY SHERWIN WILLIAMS
- **FB** FILL BOX
  CO2— CO2 = BULK CO2 FILL BOX (EQPM SCHEDULE ITEM 49.00)
  BO = BULK OIL FILL BOX (EQPM SCHEDULE ITEM 700.18)
- **FL** FIBER CEMENT LAP SIDING: HARDIEPLANK LAP SIDING, BEADED SMOOTH, 8 1/4" WIDTH, 7" EXPOSURE, HZ5,
  COLOR: STEEL – AGED PEWTER (ACM TO CONFIRM)
- **FT** FIBER CEMENT TRIM: HARDIETRIM BOARDS, 4/4 SMOOTH, 1 5/8" & 3 1/2" WIDTH, 3/4" THICK, HZ5, COLOR: STEEL – AGED PEWTER (CHECK 1 5/8" PRE–PAINT AVAILIBLITY)
- **GR** GUARD RAIL –SEE SITE PLAN FOR EXACT LOCATION AND LENGTHSEE 4/A2.1 FOR DETAILS
  PAINT: "IRON ORE" SW 7069 BY SHERWIN WILLIAMS
- **L1** RECESSED DOWN LIGHT FIXTURE – SEE ELECTRICAL
  COLOR: GOLD
- **L2** RADIAL SCONCE LIGHT FIXTURE – SEE ELECTRICAL
  C1—COLOR:
  C1= WHITE
  C2= PLATINUM SILVER
- **LE** ACCENT LIGHTING – SEE ELECTRICAL
  L1—LED LIGHT:
  L1 = SLIM LED (DOWN ONLY)
  L2 = INTEGRAL CANOPY FIXTURE
  L3 = UP ONLY FLOOD FIXTURE
- **PB** PIPE BOLLARD – PAINTED YELLOW
- **PT** (RMHC) COIN COLLECTOR
  UNIT: APERTURE WPT, #DTA2013
  CALL 1–877–766–7642 TO ORDER
- **MF** METAL FASCIA
  1 — TYPE:
  C1 1 = PRE–FAB ANCHOR–TITE FASCIA
  2 = BOTTOM TRIM AT METAL REVEAL PANEL
  3 = VERTICAL TRIM AT METAL REVEAL PANEL CORNERS, CLOSURES
  COLOR:
  C1= CITYSCAPE
  C2= RAL 7022
- **RO** ROOF DRAIN OVERFLOW PIPE PAINT TO MATCH SURROUNDING MATERIAL
- **S** McDONALD'S SIGNAGE BY OTHERS – UNDER SEPARATE PERMIT.
  C1— COLOR:
  C1= WEATHERED ZINC RACEWAY
  C2= RAL 7022 RACEWAY
- **ST** CO2 STROBE/ALARM. SEE MECHANICAL DRAWINGS FOR SPECIFICATION.
- **TL** TILE (@ BASE OF BATTEN SYSTEM)
  IRIS CEREAMICA: E–WOOD COLLECTION
  COLOR: R9 BLACK, SIZE: 6"X24"
  WATERPROOFING SETTING MATERIAL AND GROUT: BY MAPEI
  GROUT COLOR: ULTRA COLOR PLUS – 47 CHARCOAL
  GROUT WIDTH: 1/8" TO 3/16"
  CONTACT: JAN DETER, (714) 937–7500
- **UN** METAL UNDERSCORE
  COLOR: GOLD
- **W1** EXTERIOR WINDOW ASSEMBLY – TEMPERED GLASS
  COLOR: EXTRA DARK BRONZE – SEE ASSEMBLY NOTES ON 4/A5.0 & FRAME TYPES ON SHEET A6.0
- **W2** DRIVE–THRU WINDOW BY READY ACCESS
  XX MODEL: 600 SERIES, 36" SERVICE HEIGHT WITH TRANSOM, MANUAL OPEN; ELECTRONIC RELEASE
  COLOR: DEEP BRONZE
  SLIDE DIRECTION: RL = RIGHT TO LEFT
  LR = LEFT TO RIGHT

REV	DATE	DESCRIPTION	BY

DATE: .....

PREPARED BY:
URS
Architects/Engineers, Inc.
architects - engineers - planners
1255 Broad Street, Suite 201
Clifton, NJ 07013-3988
973.883.8590 fax 973.883.8501
http://www.urscorp.com

© 2019 McDonald's USA, LLC

PREPARED FOR:
McDonald's USA, LLC

These drawings and specifications are the confidential and proprietary property of McDonald's USA, LLC and shall not be copied or reproduced without written authorization. The contract documents were prepared for use on this specific site configuration with its issue date and are not to be used for other locations or with its issue date. Reproduction of these drawings for reference or example on another project requires the services of properly licensed architects and engineers. Reproduction of the contract documents for reuse on another project is not authorized.

DRAWN BY	STD ISSUE DATE	REVIEWED BY	DATE ISSUED
HM	2019_9	–	6/22/2020

TITLE: 2020 STANDARD BUILDING – BB20
4597 +10'F–WOOD/WOOD

DESCRIPTION:
WOOD BEARING WALLS W/FIBER CEMENT SIDING & Ci
WOOD ROOF TRUSS FRAMING
E.I.F.S./BATTEN/ALPOLIC PANEL/TILE/FIBER CEMENT SIDING

SITE ID: 029–0019
SITE ADDRESS: RT 130 & DUTCH NECK RD
EAST WINDSOR, NJ

SHEET NO. 029–0273
A2.0
ELEVATIONS

URS PROJECT No. 60634291 TASK: 029–0273

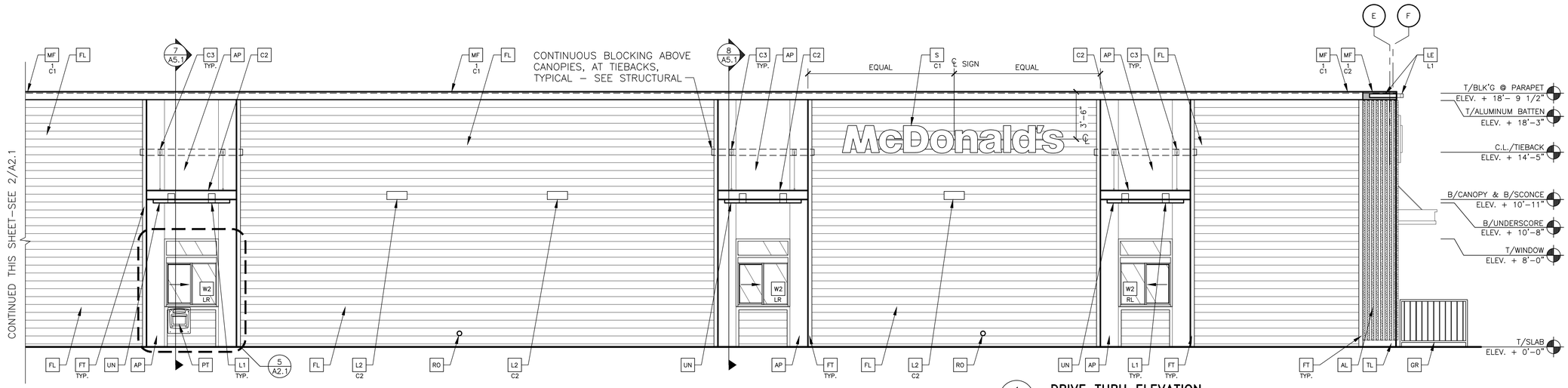

1 A2.1 **DRIVE THRU ELEVATION**
1/4" = 1'–0"

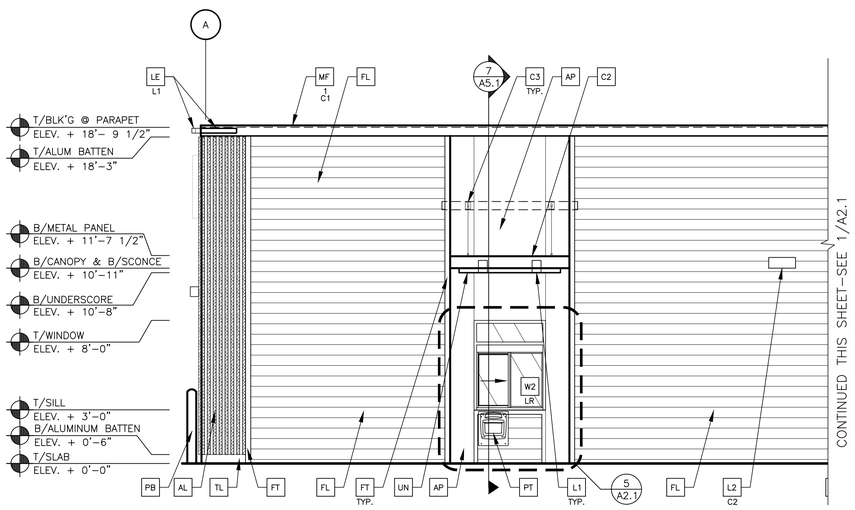

2 A2.1 **DRIVE THRU ELEVATION**
1/4" = 1'–0"

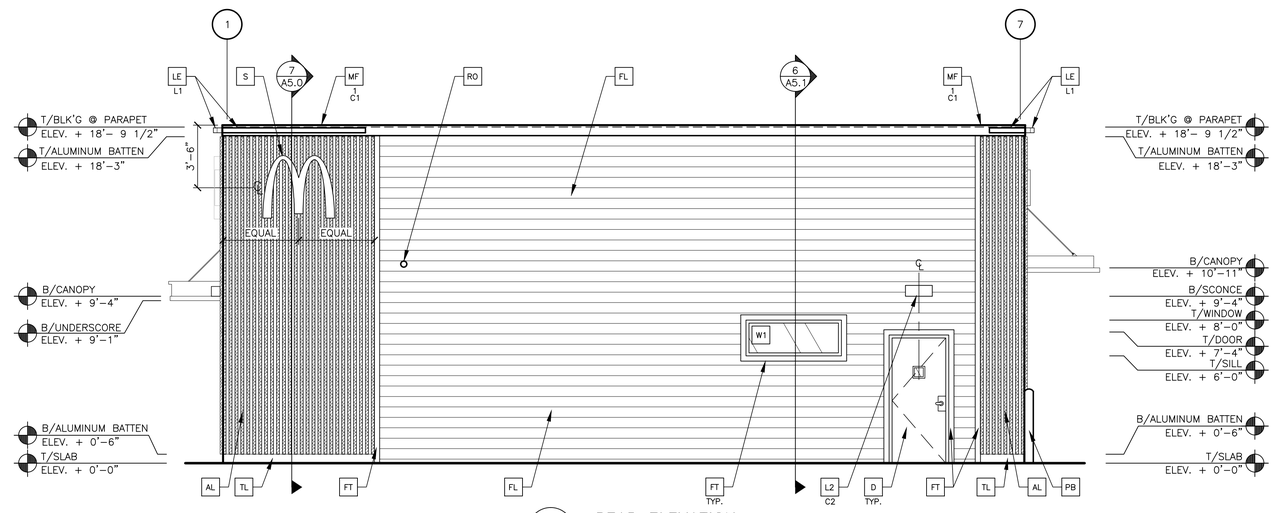

2 A2.1 **REAR ELEVATION**
1/4" = 1'–0"

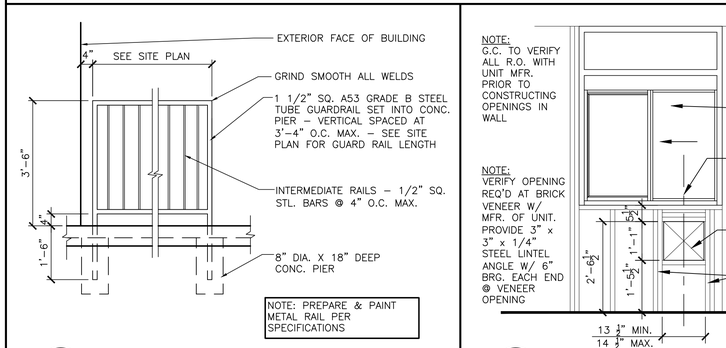

NOTE: PREPARE & PAINT METAL RAIL PER SPECIFICATIONS

4 A2.1 **GUARD RAIL DETAIL**
1/2"=1'–0"

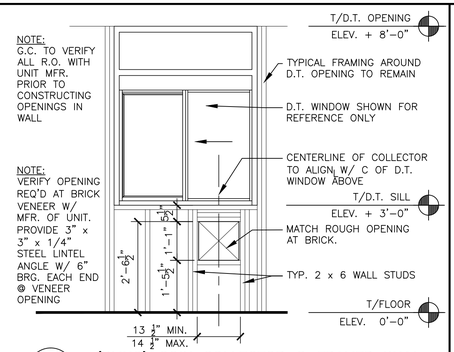

5 A2.1 **(RMHC) COIN COLLECTOR @ FRAMED WALL**
1/2" = 1'–0" INTERIOR ELEVATON

6 A2.1 **DETAIL NOT USED**
–

KEY NOTES:

- **AL** ALUMINUM BATTEN SYSTEM
  MFR: B+N INDUSTRIES
  SIZE: 2"X2" PROFILE
  COLOR: WOOD GRAIN, BACKRAIL UNFINISHED, ENDCAP PAINTED TO MATCH
  SUBSTRATE: 1/2" EXTERIOR HIGH DENSITY OVERLAY (HDO) PLYWOOD, BB, GROUP 1, HDO BOTH FACES, APA TRADEMARKED. COURSE GRIT SAND SURFACES PRIOR TO PRIMING. PRIME AND PAINT BOTH SIDES AND ALL EDGES PRIOR TO INSTALLATION.
  SUBSTRATE COLOR: "IRON ORE" SW7069 BY SHERWIN WILLIAMS
- **AP** ALPOLIC METAL PANEL (COLOR: RAL 7022)
- **C1** ALUMINUM CANOPY SYSTEM W/FASCIA
  COLOR: WHITE
- **C2** ALUMINUM CANOPY SYSTEM
  COLOR: RAL 7022
- **C3** ALUMINUM CANOPY TIEBACK
  COLOR: RAL 7022
  GC TO PROVIDE CONTINUOUS BLOCKING ON WALL BEHIND TIEBACKS
- **CJ** CONTROL JOINT
  1 —TYPE: 1 = EIFS
- **D** HOLLOW METAL DOOR
  PAINT: SHERWIN WILLIAMS SW–7019 GAUNTLET GRAY
- **DE** DECAL BY GRAPHICS SUPPLIER
  SURFACE APPLIED, FIELD INSTALLED, PRE CUT, PRE SPACED.
  SUPPLIERS:
  VOMELA (865) 330–7337, ann.bowen@vomela.com
  GFX INTERNATIONAL (847) 543–4600, mcdonaldsdecor@gfxi.com
- **E** EXTERIOR INSULATION FINISH SYSTEM (E.I.F.S.)
  C1 —COLOR:
  C1 = "IRON ORE" SW 7069 BY SHERWIN WILLIAMS
- **FB** FILL BOX
  CO2 — CO2 = BULK CO2 FILL BOX (EQPM SCHEDULE ITEM 49.00)
  BO = BULK OIL FILL BOX (EQPM SCHEDULE ITEM 700.18)
- **FL** FIBER CEMENT LAP SIDING: HARDIEPLANK LAP SIDING, BEADED SMOOTH, 8 1/4" WIDTH, 7" EXPOSURE, HZ5, COLOR: STEEL – AGED PEWTER (ACM TO CONFIRM)
- **FT** FIBER CEMENT TRIM: HARDIETRIM BOARDS, 4/4 SMOOTH, 1 5/8" & 3 1/2" WIDTH, 3/4" THICK, HZ5, COLOR: STEEL – AGED PEWTER (CHECK 1 5/8" PRE–PAINT AVAILBLITY)
- **GR** GUARD RAIL –SEE SITE PLAN FOR EXACT LOCATION AND LENGTHSEE 4/A2.1 FOR DETAILS
  PAINT: "IRON ORE" SW 7069 BY SHERWIN WILLIAMS
- **L1** RECESSED DOWN LIGHT FIXTURE – SEE ELECTRICAL
  COLOR: GOLD
- **L2** RADIAL SCONCE LIGHT FIXTURE – SEE ELECTRICAL
  C1—COLOR:
  C1= WHITE
  C2= PLATINUM SILVER
- **LE** ACCENT LIGHTING – SEE ELECTRICAL
  L1—LED LIGHT:
  L1 = SLIM LED (DOWN ONLY)
  L2 = INTEGRAL CANOPY FIXTURE
  L3 = UP ONLY FLOOD FIXTURE
- **PB** PIPE BOLLARD – PAINTED YELLOW
- **PT** (RMHC) COIN COLLECTOR
  UNIT: APERTURE WPT, #DTA2013
  CALL 1–877–766–7642 TO ORDER
- **MF** METAL FASCIA
  1 —TYPE:
  C1 1 = PRE–FAB ANCHOR–TITE FASCIA
  2 = BOTTOM TRIM AT METAL REVEAL PANEL
  3 = VERTICAL TRIM AT METAL REVEAL PANEL CORNERS, CLOSURES
  COLOR:
  C1= CITYSCAPE
  C2= RAL 7022
- **RO** ROOF DRAIN OVERFLOW PIPE PAINT TO MATCH SURROUNDING MATERIAL
- **S** McDONALD'S SIGNAGE BY OTHERS – UNDER SEPARATE PERMIT.
  C1 — COLOR:
  C1= WEATHERED ZINC RACEWAY
  C2= RAL 7022 RACEWAY
- **ST** CO2 STROBE/ALARM. SEE MECHANICAL DRAWINGS FOR SPECIFICATION.
- **TL** TILE (@ BASE OF BATTEN SYSTEM)
  IRIS CEREAMICA: E–WOOD COLLECTION
  COLOR: R9 BLACK, SIZE: 6"X24"
  WATERPROOFING SETTING MATERIAL AND GROUT: BY MAPEI
  GROUT COLOR: ULTRA COLOR PLUS – 47 CHARCOAL
  GROUT WIDTH: 1/8" TO 3/16"
  CONTACT: JAN DETER, (714) 937–7500
- **UN** METAL UNDERSCORE
  COLOR: GOLD
- **W1** EXTERIOR WINDOW ASSEMBLY – TEMPERED GLASS
  COLOR: EXTRA DARK BRONZE – SEE ASSEMBLY NOTES ON 4/A5.0 & FRAME TYPES ON SHEET A6.0
- **W2** DRIVE–THRU WINDOW BY READY ACCESS
  XX — MODEL: 600 SERIES, 36" SERVICE HEIGHT WITH TRANSOM, MANUAL OPEN; ELECTRONIC RELEASE
  COLOR: DEEP BRONZE
  SLIDE DIRECTION: RL = RIGHT TO LEFT
  LR = LEFT TO RIGHT

REV	DATE	DESCRIPTION	BY

DATE: .....

PREPARED BY:
URS
Architects/Engineers, Inc.
architects - engineers - planners
1255 Broad Street, Suite 201
Clifton, NJ 07013-3988
973.883.8590 fax 973.883.8501
http://www.urscorp.com

© 2019 McDonald's USA, LLC

PREPARED FOR:
McDonald's USA, LLC

These drawings and specifications are the confidential and proprietary property of McDonald's USA, LLC and shall not be copied or reproduced without written authorization. The contract documents were prepared for use on the specific site in conjunction with its issue date, and are incomplete without the specifications and addenda. Reproduction of these drawings for reference or example on another project requires the services of properly licensed architects and engineers. Reproduction of the contract documents for reuse on another project is not authorized.

DRAWN BY	STD ISSUE DATE	REVIEWED BY	DATE ISSUED
HM	2019_9	–	6/22/2020

TITLE: 2020 STANDARD BUILDING – BB20
4597 +10'F–WOOD/WOOD

DESCRIPTION: WOOD BEARING WALLS W/FIBER CEMENT SIDING & CI
WOOD ROOF TRUSS FRAMING
E.I.F.S./BATTEN/ALPOLIC PANEL/TILE/FIBER CEMENT SIDING

SITE ID: 029–0019
SITE ADDRESS: RT 130 & DUTCH NECK RD EAST WINDSOR, NJ

SHEET NO. 029–0273
A2.1
ELEVATIONS

URS PROJECT No. 60634291 TASK: 029–0273